EFFENZ
MY SWEET HOME SG
Sleek and sophisticated ceiling fan design that best suits the climatic and functional needs of Singapore

EFFENZ

MY SWEET HOME SG

Ceiling Fan with LED Light

Thurman 343 LED 34”

$658

White

Midnight Titanium

Black

Honey Maplewood

Matte Titanium

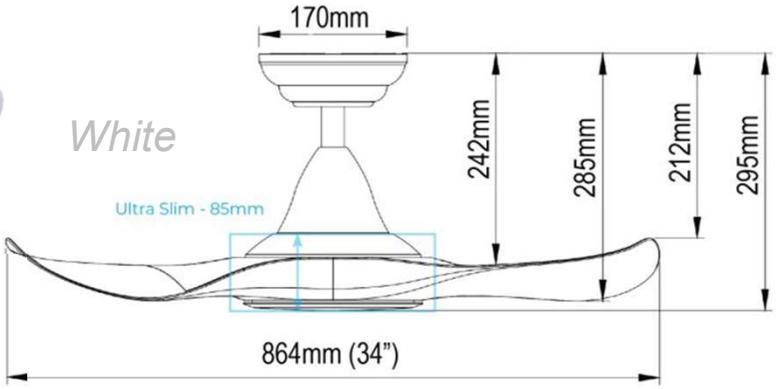

Fan Motor: ECM DC 155
Fan Size: 864mm (34")
Number of Blades / Material: 3 Blades / ABS
Number of Fan Speeds: 1 to 5
Fan (RPM): 120-280
Wind Speed (M/S): 1.18-3.17
Airflow (CFM): 2500-6720
Efficiency CFM Per Watt: 420 at Highest Speed
Fan Wattage: 3W-16W
Fan Voltage: 230V/50Hz
Light Wattage: 2.2W-22W
Light Luminous Flux: LUMENS (DAY-2550, WARM-2450, COOL-2570)
Light Function: Dimmable from 10-100%
Remote Control: Included
Natural Wind Function: Yes
Forward/Reverse Airflow Function: Yes
Box Dimension (L x W x H): 768mm x 427mm x 251mm
Nett Weight: 5.6kg
Gross Weight: 7.6kg

Isabel 403 LED 40”

$678

White

Midnight Titanium

Black

Honey Maplewood

Matte Titanium

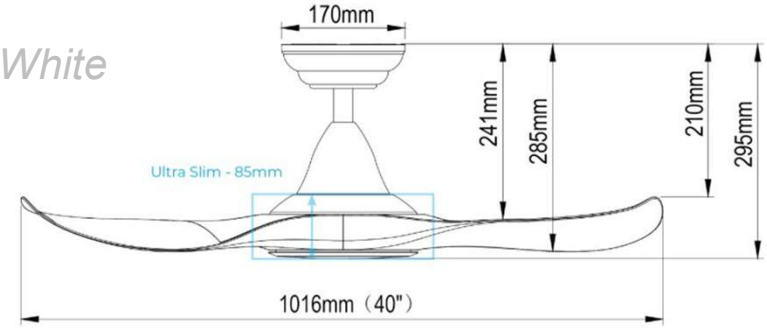

Fan Motor: ECM DC 155
Fan Size: 1016mm (40”)
Number of Blades / Material: 3 Blades / ABS
Number of Fan Speeds: 1 to 5
Fan (RPM): 110-260
Wind Speed (M/S): 1.46-3.53
Airflow (CFM): 3100-7490
Efficiency CFM Per Watt: 288 at Highest Speed
Fan Wattage: 3W-26W
Fan Voltage: 230V/50Hz
Light Wattage: 2.2W-22W
Light Luminous Flux: LUMENS (DAY-2550, WARM-2450, COOL-2570)
Light Function: Dimmable from 10-100%
Remote Control: Included
Natural Wind Function: Yes
Forward/Reverse Airflow Function: Yes
Box Dimension (L x W x H): 768mm x 427mm x 251mm
Nett Weight: 5.8kg
Gross Weight: 7.8kg

Troy 463 LED 46”

$698

White

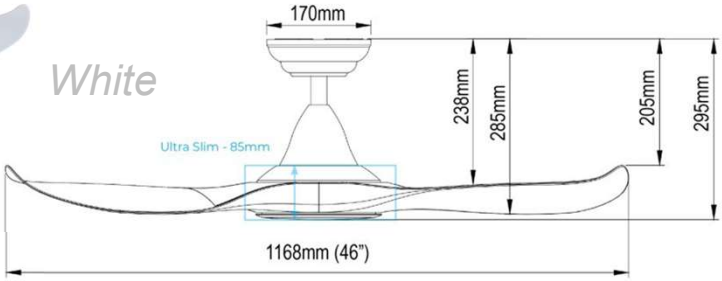

Midnight Titanium

Black

Honey Mapleood

Matte Titanium

Fan Motor: ECM DC 155
Fan Size: 1168mm (46”)
Number of Blades / Material: 3 Blades / ABS
Number of Fan Speeds: 1 to 5
Fan (RPM): 100-230
Wind Speed (M/S): 1.51-3.96
Airflow (CFM): 3200-8400
Efficiency CFM Per Watt: 262.5 at Highest Speed
Fan Wattage: 3W-32W
Fan Voltage: 230V/50Hz
Light Wattage: 2.2W-22W
Light Luminous Flux: LUMENS (DAY-2550, WARM-2450, COOL-2570)
Light Function: Dimmable from 10-100%
Remote Control: Included
Natural Wind Function: Yes
Forward/Reverse Airflow Function: Yes
Box Dimension (L x W x H): 768mm x 427mm x 251mm
Nett Weight: 6.0kg
Gross Weight: 8.0kg

Isaac 523 LED 52”

$718

White

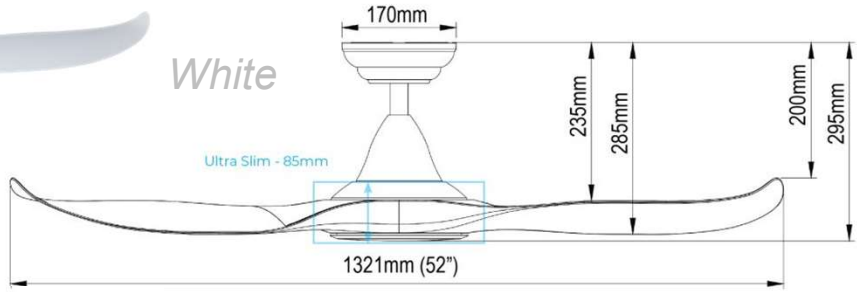

Midnight Titanium

Black

Honey Maplewood

Matte Titanium

Fan Motor: ECM DC 155
Fan Size: 1321mm (52”)
Number of Blades / Material: 3 Blades / ABS
Number of Fan Speeds: 1 to 5
Fan (RPM): 90-210
Wind Speed (M/S): 1.76-4.06
Airflow (CFM): 3720-8610
Efficiency CFM Per Watt: 253.2 at Highest Speed
Fan Wattage: 5W-34W
Fan Voltage: 230V/50Hz
Light Wattage: 2.2W-22W
Light Luminous Flux: LUMENS (DAY-2550, WARM-2450, COOL-2570)
Light Function: Dimmable from 10-100%
Remote Control: Included
Natural Wind Function: Yes
Forward/Reverse Airflow Function: Yes
Box Dimension (L x W x H): 768mm x 427mm x 251mm
Nett Weight: 6.5kg
Gross Weight: 8.5kg

Tiffany 603 LED 60”

$738

White

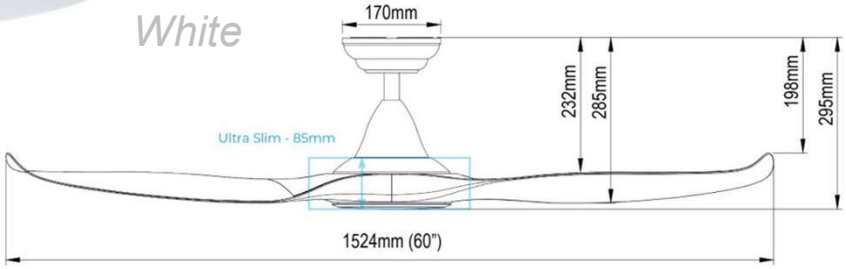

Midnight Titanium

Black

Honey Maplewood

Matte Titanium

Fan Motor: ECM DC 155
Fan Size: 1524mm (60”)
Number of Blades / Material: 3 Blades / ABS
Number of Fan Speeds: 1 to 5
Fan (RPM): 90-170
Wind Speed (M/S): 1.77-3.56
Airflow (CFM): 3760-7540
Efficiency CFM Per Watt: 203.8 at Highest Speed
Fan Wattage: 6W-37W
Fan Voltage: 230V/50Hz
Light Wattage: 2.2W-22W
Light Luminous Flux: LUMENS (DAY-2550, WARM-2450, COOL-2570)
Light Function: Dimmable from 10-100%
Remote Control: Included
Natural Wind Function: Yes
Forward/Reverse Airflow Function: Yes
Box Dimension (L x W x H): 768mm x 427mm x 251mm
Nett Weight: 6.7kg
Gross Weight: 8.7kg

With LED

Troy 463 (46”) : $748
Isaac 523 (52”) : $768
Tiffany 603 (60”) : $788

Limited edition

Black Dutch Cocoa

Special edition

White Dutch Cocoa

Sizes available:
34”, 40”,46”,52”,60”

With LED

White

Thurman 343 (34”): $708
Isabel 403 (40”): $728
Troy 463 (46”): $748
Isaac 523 (52”): $768
Tiffany 603 (60”): $788

Midnight Titanium

Matte Titanium

Black

Honey Maplewood

With LED

Troy 463 (46”) : $798
Isaac 523 (52”) : $818
Tiffany 603 (60”) : $838

Limited edition

Black Dutch Cocoa

Special edition

White Dutch Cocoa

EFENZ
MY SWEET HOME SG
CEILING FAN
WITHOUT LIGHT

Thurman 343 NL 34”

$608

White

Midnight Titanium

Black

Honey Maple wood

Matte Titanium

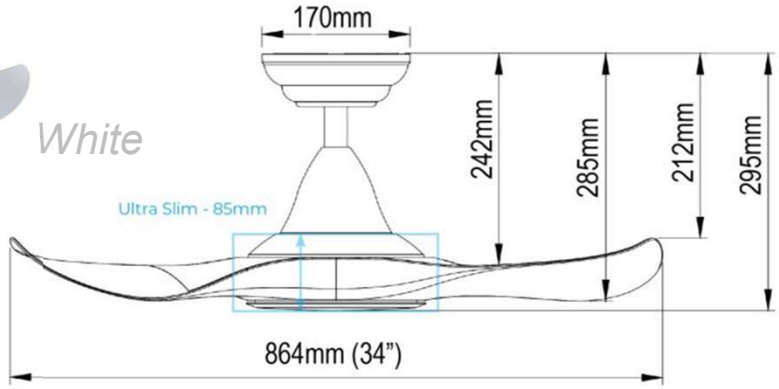

Fan Motor: ECM DC 155 Fan
Size: 864mm (34")
Number of Blades / Material: 3 Blades / ABS
Number of Fan Speeds: 1 to 5
Fan (RPM): 120-280
Wind Speed (M/S): 1.18-3.17
Airflow (CFM): 2500-6720
Efficiency CFM Per Watt: 420 at Highest Speed
Fan Wattage: 3W-16W
Fan Voltage: 230V/50Hz
Remote Control: Included
Natural Wind Function: Yes
Forward/Reverse Airflow Function: Yes
Box Dimension (L x W x H): 768mm x 427mm x 251mm
Nett Weight: 5.6kg
Gross Weight: 7.6kg

Isabel 403 NL 40”

$628

White

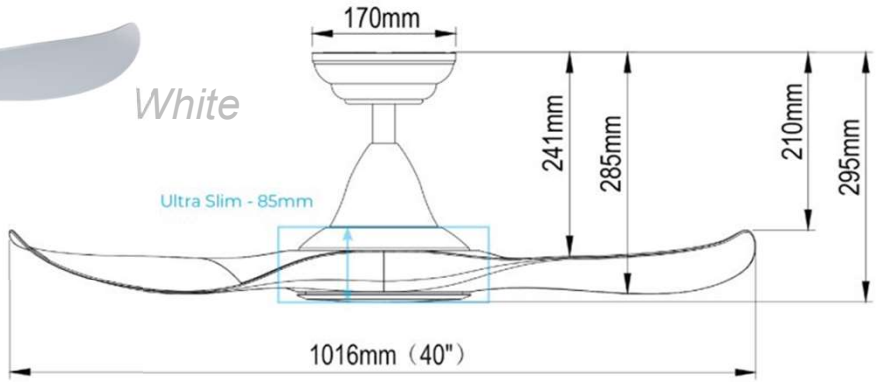

Midnight Titanium

Black

Honey Maplewood

Matte Titanium

Fan Motor: ECM DC 155
Fan Size: 1016mm (40”)
Number of Blades / Material: 3 Blades / ABS
Number of Fan Speeds: 1 to 5
Fan (RPM): 110-260
Wind Speed (M/S): 1.46-3.53
Airflow (CFM): 3100-7490
Efficiency CFM Per Watt: 288 at Highest Speed
Fan Wattage: 3W-26W
Fan Voltage: 230V/50Hz
Remote Control: Included
Natural Wind Function: Yes
Forward/Reverse Airflow Function: Yes
Box Dimension (L x W x H): 768mm x 427mm x 251mm
Nett Weight: 5.8kg
Gross Weight: 7.8kg

Troy 463 NL 46”

$648

White

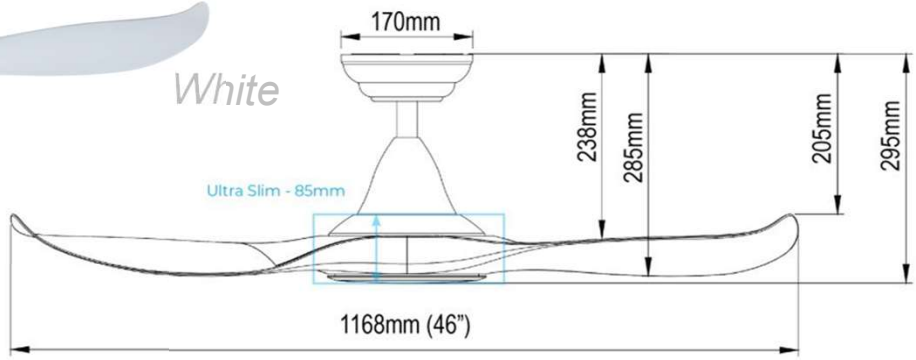

Midnight Titanium

Black

Honey Maplewood

Matte Titanium

Fan Motor: ECM DC 155
Fan Size: 1168mm (46”)
Number of Blades / Material: 3 Blades / ABS
Number of Fan Speeds: 1 to 5
Fan (RPM): 100-230
Wind Speed (M/S): 1.51-3.96
Airflow (CFM): 3200-8400
Efficiency CFM Per Watt: 262.5 at Highest Speed
Fan Wattage: 3W-32W
Fan Voltage: 230V/50Hz
Remote Control: Included
Natural Wind Function: Yes
Forward/Reverse Airflow Function: Yes
Box Dimension (L x W x H): 768mm x 427mm x 251mm
Nett Weight: 6.0kg
Gross Weight: 8.0kg

Isaac 523 NL 52”

$668

White

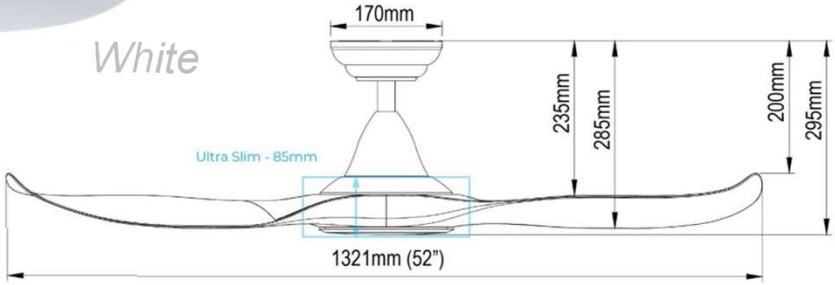

Midnight Titanium

Black

Honey Maplewood

Matte Titanium

Fan Motor: ECM DC 155
Fan Size: 1321mm (52”)
Number of Blades / Material: 3 Blades / ABS
Number of Fan Speeds: 1 to 5
Fan (RPM): 90-210
Wind Speed (M/S): 1.76-4.06
Airflow (CFM): 3720-8610
Efficiency CFM Per Watt: 253.2 at Highest Speed
Fan Wattage: 5W-34W
Fan Voltage: 230V/50Hz
Remote Control: Included
Natural Wind Function: Yes
Forward/Reverse Airflow Function: Yes
Box Dimension (L x W x H): 768mm x 427mm x 251mm
Nett Weight: 6.5kg
Gross Weight: 8.5kg

Tiffany 603 NL 60”

$688

White

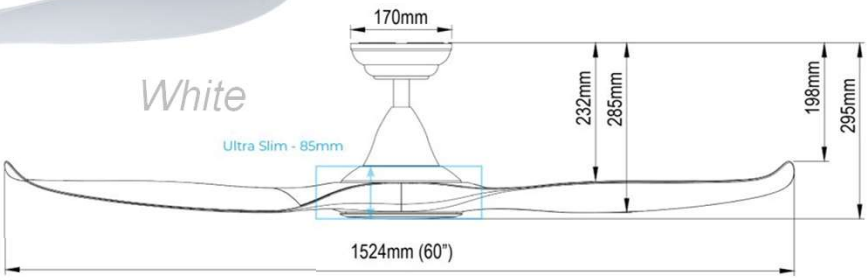

Midnight Titanium

Black

Honey Maplewood

Matte Titanium

Fan Motor: ECM DC 155
Fan Size: 1524mm (60”)
Number of Blades / Material: 3 Blades / ABS
Number of Fan Speeds: 1 to 5
Fan (RPM): 90-170
Wind Speed (M/S): 1.77-3.56
Airflow (CFM): 3760-7540
Efficiency CFM Per Watt: 203.8 at Highest Speed
Fan Wattage: 6W-37W
Fan Voltage: 230V/50Hz
Remote Control: Included
Natural Wind Function: Yes
Forward/Reverse Airflow Function: Yes
Box Dimension (L x W x H): 768mm x 427mm x 251mm
Nett Weight: 6.7kg
Gross Weight: 8.7kg

No Light

Troy 463 (46”) : $698
Isaac 523 (52”) : $718
Tiffany 603 (60”) : $738

Limited edition

Black Dutch Cocoa

Special edition

White Dutch Cocoa

Sizes available: 34”, 40”,46”,52”,60”

No Light

White

Thurman 343 NL (34”): $658
Isabel 403 NL (40”): $678
Troy 463 NL (46”): $698
Isaac 523 NL (52”): $718
Tiffany 603 NL (60”): $738

Midnight Titanium

Matte Titanium

Black

Honey Maplewood

No Light

Troy 463 NL (46”): $748
Isaac 523 NL (52”): $768
Tiffany 603 NL (60”): $788

Limited edition

Black Dutch Cocoa

Special edition

White Dutch Cocoa

MY SWEET

HOME SG

Hotline: +65 6285 8242

Whatsapp: +65 9451 5162